Work Order ID 68550

Friday, April 15, 2011 11:28:14 AM

Item ID: D350-748-201 **Accept** **Setup Start** **Stop**

Revision ID:

Item Name: Crosstube Installation, High Aft

Start Date: 4/18/2011 **Start Qty:** 1.00 **Cust Item ID:**

Required Date: 5/5/2011 **Req'd Qty:** 1.00 **Customer:**

Reference:

Run Start **Stop**

Approvals: **Process Plan:** MF **Date:** 11-4-15 **Tooling:** _____ **Date:** _____

QC: _____ **Date:** _____ **SPC (Y/N):** _____ **Date:** _____

Sequence ID/ Work Center ID	Operation Description	Set Up/ Run Hours	Tool ID	Tool #	Plan Code	Accept Qty	Reject Qty	Reject Number	Insp. Stamp
Draw Nbr / **Revision Nbr**									
D350-748-241 / F									
100	DOCUMENT CONTROL	0.00							
DC	**Memo**	0.00							
Document Control	Photocopy bluefile & type labels per PPPD350-748-201				CHG002	δ 11/10/25			
110	BENDING MACHINE - CROSSTUBES	0.00							Pho →
CNC Bend 2	**Memo**	0.00							
CNC Alpha 160 Bender	Bend tube as per Dwg D350-748-241 using CNC bender program D350A and Folio FT_____					DP	11-8-30		
120	QC15- Crosstube Dimensional Check	0.00							
QC	**Memo**	0.00				δ 11/08/30	(14)		
Quality Control									

Dart Aerospace Ltd

W/O: 68550	WORK ORDER CHANGES						
DATE	STEP	PROCEDURE CHANGE	By	Date	Qty	Approval Chief Eng / Prod Mgr	Approval QC Inspector

Part No: D350-748-201 PAR #: N/A Fault Category: ~~Laminate~~ Gears NCR: Yes (No) DQA: [illegible] Date: 11.10.28

11-934 Resolution: ~~good as is~~ use Disposition: ~~use as is~~ Cross tube use QA: N/C Closed: [illegible] Date: 11/10/31

NCR:	WORK ORDER NON-CONFORMANCE (NCR)							
DATE	STEP	Description of NC Section A	Corrective Action Section B: Initial Chief Eng	Action Description Chief Eng	Sign & Date	Verification Section C	Approval Chief Eng	Approval QC Inspector
11.08.30	110	Tube bent too high. +0.350 from nominal. R.L. Priesy	GP 11.08.30 QS 042	Aft tube so no negative effect on tail ROTOR Height. Tube is even. Acceptable	N/A	[illegible] 11/08/31	GP 11.08.30 QS 042	[illegible] 11/08/31

NOTE: Date & initial all entries

H:\fFORMS\Quality Assurance\approved QA\NCRWO RevE

Work Order ID 68550

Friday, April 15, 2011 11:28:14 AM

Item ID: D350-748-201 **Accept** **Setup Start** **Stop**

Revision ID:

Item Name: Crosstube Installation, High Aft

Start Date: 4/18/2011 **Start Qty:** 1.00 **Cust Item ID:**

Required Date: 5/5/2011 **Req'd Qty:** 1.00 **Customer:**

Reference:

Run Start **Stop**

Approvals: **Process Plan:** _____ **Date:** _____ **Tooling:** _____ **Date:** _____

QC: _____ **Date:** _____ **SPC (Y/N):** _____ **Date:** _____

Sequence ID/ Work Center ID	Operation Description	Set Up/ Run Hours	Tool ID	Tool #	Plan Code	Accept Qty	Reject Qty	Reject Number	Insp. Stamp
125		0.00							
HandFXtube	**Memo**	0.00	SAD	11-08-70					
Hand Finishing Crosstubes	***Stress relief*** Heat treat crosstube as per QSI010 4.3 Temp: 375 Start time: 4h30 Finish time: 8h30								
127	QC5- Inspect part completeness to step on W/O	0.00							
QC	**Memo**	0.00	8 w/08/30						
Quality Control									

Dart Aerospace Ltd

W/O:		WORK ORDER CHANGES					
DATE	STEP	PROCEDURE CHANGE	By	Date	Qty	Approval Chief Eng / Prod Mgr	Approval QC Inspector

Part No: _____ **PAR #:** _____ **Fault Category:** _____ **NCR:** Yes No **DQA:** _____ **Date:** _____

Resolution: _____ **Disposition:** _____ **QA: N/C Closed:** _____ **Date:** _____

NCR:		WORK ORDER NON-CONFORMANCE (NCR)						
DATE	STEP	Description of NC Section A	Corrective Action Section B			Verification Section C	Approval Chief Eng	Approval QC Inspector
			Initial Chief Eng	Action Description Chief Eng	Sign & Date			

NOTE: Date & initial all entries

H:\fFORMS\Quality Assurance\approved QA\NCRWO RevE

Work Order ID 68550

Friday, April 15, 2011 11:28:14 AM

Item ID: D350-748-201 **Accept** **Setup Start** **Stop**

Revision ID:

Item Name: Crosstube Installation, High Aft

Start Date: 4/18/2011 **Start Qty:** 1.00 **Cust Item ID:**

Required Date: 5/5/2011 **Req'd Qty:** 1.00 **Customer:**

Reference:

Run Start **Stop**

Approvals: **Process Plan:** _____ **Date:** _____ **Tooling:** _____ **Date:** _____

QC: _____ **Date:** _____ **SPC (Y/N):** _____ **Date:** _____

Sequence ID/ Work Center ID	Operation Description	Set Up/ Run Hours	Tool ID	Tool #	Plan Code	Accept Qty	Reject Qty	Reject Number	Insp. Stamp
130		0.00							
Crosstubes	Crosstubes					1			
Crosstubes	**Memo**	0.00							
	1-Drill Tube as per Dwg D350-748-241 Using DT8876 Drill Jigs, Set-up drill table as per QSI 010								
	2-Deburr								
	3-Engrave Part # and Batch # as per Dwg D350-748-241								
	4-Remove all marks from tube within limits of D350-748-241								
	5- Apply a light coat of LPS3 on the interior of tube Batch: M109956								
140	QC6- Inspect dimensions to drawing	0.00							
QC	**Memo**	0.00							
Quality Control									

SAD 11-09-02 ~~11-02-07~~

SAD 11-09-07

Sulorlor

Dart Aerospace Ltd

W/O:		WORK ORDER CHANGES					
DATE	STEP	PROCEDURE CHANGE	By	Date	Qty	Approval Chief Eng / Prod Mgr	Approval QC Inspector

Part No: _____ **PAR #:** _____ **Fault Category:** _____ **NCR:** Yes No **DQA:** _____ **Date:** _____

Resolution: _____ **Disposition:** _____ **QA: N/C Closed:** _____ **Date:** _____

NCR:		WORK ORDER NON-CONFORMANCE (NCR)						
DATE	STEP	Description of NC Section A	Corrective Action Section B			Verification Section C	Approval Chief Eng	Approval QC Inspector
			Initial Chief Eng	Action Description Chief Eng	Sign & Date			

NOTE: Date & initial all entries

H:\fFORMS\Quality Assurance\approved QA\NCRWO RevE

Work Order ID 68550

Friday, April 15, 2011 11:28:14 AM

Item ID: D350-748-201 **Accept** **Setup Start**

Revision ID:

Item Name: Crosstube Installation, High Aft **Stop**

Start Date: 4/18/2011 **Start Qty:** 1.00 **Cust Item ID:**

Required Date: 5/5/2011 **Req'd Qty:** 1.00 **Customer:**

Reference:

Run Start

Approvals: **Process Plan:** _____ **Date:** _____ **Tooling:** _____ **Date:** _____

Stop

QC: _____ **Date:** _____ **SPC (Y/N):** _____ **Date:** _____

Sequence ID/ Work Center ID	Operation Description	Set Up/ Run Hours	Tool ID	Tool #	Plan Code	Accept Qty	Reject Qty	Reject Number	Insp. Stamp
150	Outsource process-Cadplate per QSI017 4.1.9.1	0.00							
Outsource3	**Memo**	0.00							
Outsource process - Cad plate	Issue P/O: 14834 Stress relief at 375° for 5 hours Magnetic Particle Inspect per ASTM E1444 Cadium Plate per AMS-QQ-P-416B, Class 1, Type 2 Embrittle relief at 375° for 8 hours, Chromate Treat Possibe Supplier: Southwest United Industries Ensure Certificate of Conformity is attached								
160	Receive & Inspect for Damage & Mat'l Certs	0.00							
Packaging	**Memo**	0.00							
Packaging	Ensure certificate of conformity is attached								
170	QC5- Inspect part completeness to step on W/O	0.00							
QC	**Memo**	0.00							
Quality Control									

CL 11/09/06 (1)

☆SEE W/O CHG ATTACHED

11/10/10 (1)

11/10/14 (1) RTO

11 10 17 (1)

Dart Aerospace Ltd

W/O:		WORK ORDER CHANGES					
DATE	STEP	PROCEDURE CHANGE	By	Date	Qty	Approval Chief Eng / Prod Mgr	Approval QC Inspector

Part No: _____ **PAR #:** _____ **Fault Category:** _____ **NCR:** Yes No **DQA:** _____ **Date:** _____

Resolution: _____ **Disposition:** _____ **QA: N/C Closed:** _____ **Date:** _____

NCR:		WORK ORDER NON-CONFORMANCE (NCR)						
DATE	STEP	Description of NC Section A	Corrective Action Section B			Verification Section C	Approval Chief Eng	Approval QC Inspector
			Initial Chief Eng	Action Description Chief Eng	Sign & Date			

NOTE: Date & initial all entries

Dart Aerospace Ltd

W/O: 68550

WORK ORDER CHANGES

DATE	STEP	PROCEDURE CHANGE	By	Date	Qty	Approval Chief Eng / Prod Mgr	Approval QC Inspector
11.10.13	161	LOAD TUBE TO 3000 lb FOR 1 MINUTE REF D.S. EMAIL	[illegible]	11.10.14	1	[illegible] 11.10.14 QS104	[illegible] 11/10/26
11.10.13	162	NDT TUBE PO 15157	[illegible]	11-10-14	1	[illegible]	[illegible] 11/10/26

Part No: D350-748-201 **PAR #:** _____ **Fault Category:** _____ **NCR:** Yes No **DQA:** _____ **Date:** _____

Resolution: _____ **Disposition:** _____ **QA: N/C Closed:** _____ **Date:** _____

NCR:

WORK ORDER NON-CONFORMANCE (NCR)

DATE	STEP	Description of NC Section A	Corrective Action Section B: Initial Chief Eng	Action Description Chief Eng	Sign & Date	Verification Section C	Approval Chief Eng	Approval QC Inspector

NOTE: Date & initial all entries

H:\fFORMS\Quality Assurance\approved QA\NCRWO RevE

Chris Provencal

From: David Shepherd <dshepherd@dartaero.com>
Sent: Tuesday, April 27, 2010 3:40 PM
To: 'Mike Petsche'
Cc: 'Bill Beckett'; 'L Lacelle'; 'Chris Provencal'; 'Dan Stow'; ssheldon@dartaero.com
Subject: 350 crosstubes

Mike,

I discussed the 350 crosstube load testing with Bill a little while ago and this plan makes sense to him.

So, my recommendation to clear these crosstubes is to load the fwd crosstubes to 3500 lb and the aft crosstubes to 3000 lb in the deflection test rig and document on the work orders that this test has been completed. Hold max load for 1 minute. Per TP-D350-748-2, these loads represent the maximum load on these crosstubes at gross weight and are below the yield point of the material. I would like to request that Chris Provencal witness these tests and sign off the work orders based on his experience with Dart landing gears. My feeling is that if there is a problem with the parts, it will manifest itself during this load test. I, for one, would feel a lot more confident in testing each crosstube in this manner than relying totally on what Exova has to say. I think it would be very difficult to reach a conclusion on the whole batch on the basis of cracks in two parts from the batch.

I believe that we can accomplish this before next Friday, which also gives us time to hear what Exova has to say in case it has an impact on our decision. So far, what I have seen from Exova shows me that there are fluctuations in the heat treating but the tubes are heat treated to our specification.

For this reason, I believe we should tell DHS that it looks like we will be able to start shipping 350 crosstubes by May 7th pending a successful Engineering test of the material.

David.

Work Order ID 68550

Friday, April 15, 2011 11:28:14 AM

Item ID: D350-748-201 **Accept** **Setup Start** **Stop**

Revision ID:

Item Name: Crosstube Installation, High Aft

Start Date: 4/18/2011 **Start Qty:** 1.00 **Cust Item ID:**

Required Date: 5/5/2011 **Req'd Qty:** 1.00 **Customer:**

Reference:

Run Start **Stop**

Approvals: **Process Plan:** _____ **Date:** _____ **Tooling:** _____ **Date:** _____

QC: _____ **Date:** _____ **SPC (Y/N):** _____ **Date:** _____

Sequence ID/ Work Center ID	Operation Description	Set Up/ Run Hours	Tool ID	Tool #	Plan Code	Accept Qty	Reject Qty	Reject Number	Insp. Stamp
180	SprayPaint	0.00							
SprayPaint	**Memo**	0.00							
Spray Painting	1-Prime inside crosstube as per QSI 005 4.2 2-Paint Outside of Tube as per Dart QSI 005 4.2								
190	QC14- Inspect Spray Paint	0.00							
QC	**Memo**	0.00							
Quality Control	Then,Wrap in plastic bag to protect from scratches								
200	Crosstubes	0.00							
Crosstubes	**Memo**	0.00							
Crosstubes	1-Install Ground wire Insert,then insert screw and washer 2-Install Abraision strips as per Dwg D350-748-241 & QSI 035. 3-Install supports Using Dt8876 as per Dwg D350-748-241,Torque to 60-80 IN-LBS								

Accept Qty	Reject Qty	Reject Number	Insp. Stamp
[illegible]	11	-10-	09
[illegible]	11	-10-	20 (1)
[illegible]	11	-10-	21 (1)

Dart Aerospace Ltd

W/O:		WORK ORDER CHANGES					
DATE	STEP	PROCEDURE CHANGE	By	Date	Qty	Approval Chief Eng / Prod Mgr	Approval QC Inspector

Part No: _____ **PAR #:** _____ **Fault Category:** _____ **NCR:** Yes No **DQA:** _____ **Date:** _____

Resolution: _____ **Disposition:** _____ **QA: N/C Closed:** _____ **Date:** _____

NCR:		WORK ORDER NON-CONFORMANCE (NCR)						
DATE	STEP	Description of NC Section A	Corrective Action Section B			Verification Section C	Approval Chief Eng	Approval QC Inspector
			Initial Chief Eng	Action Description Chief Eng	Sign & Date			

NOTE: Date & initial all entries

H:\fFORMS\Quality Assurance\approved QA\NCRWO RevE

Work Order ID 68550

Friday, April 15, 2011 11:28:14 AM

Item ID: D350-748-201 **Accept** **Setup Start** **Stop**

Revision ID:

Item Name: Crosstube Installation, High Aft

Start Date: 4/18/2011 **Start Qty:** 1.00 **Cust Item ID:**

Required Date: 5/5/2011 **Req'd Qty:** 1.00 **Customer:**

Reference:

Run Start **Stop**

Approvals: **Process Plan:** _____ **Date:** _____ **Tooling:** _____ **Date:** _____

QC: _____ **Date:** _____ **SPC (Y/N):** _____ **Date:** _____

Sequence ID/ Work Center ID	Operation Description	Set Up/ Run Hours	Tool ID	Tool #	Plan Code	Accept Qty	Reject Qty	Reject Number	Insp. Stamp
210	QC5- Inspect part completeness to step on W/O	0.00							
QC	Memo	0.00	8/11/0121			(KC)			
Quality Control									
220	Pick Kit	0.00							
Packaging	Memo	0.00				11/10/24			
Packaging									
230	QC4- 100% Inspect kits for completeness	0.00							
QC	Memo	0.00	8/11/0125			(KC)			
Quality Control									

Dart Aerospace Ltd

W/O:		WORK ORDER CHANGES					
DATE	STEP	PROCEDURE CHANGE	By	Date	Qty	Approval Chief Eng / Prod Mgr	Approval QC Inspector

Part No: _____ **PAR #:** _____ **Fault Category:** _____ **NCR:** Yes No **DQA:** _____ **Date:** _____

Resolution: _____ **Disposition:** _____ **QA: N/C Closed:** _____ **Date:** _____

NCR:		WORK ORDER NON-CONFORMANCE (NCR)						
DATE	STEP	Description of NC Section A	Corrective Action Section B			Verification Section C	Approval Chief Eng	Approval QC Inspector
			Initial Chief Eng	Action Description Chief Eng	Sign & Date			

NOTE: Date & initial all entries

H:\fFORMS\Quality Assurance\approved QA\NCRWO RevE

Work Order ID 68550

Friday, April 15, 2011 11:28:14 AM

Item ID: D350-748-201 **Accept** **Setup Start**

Revision ID: **Stop**

Item Name: Crosstube Installation, High Aft

Start Date: 4/18/2011 **Start Qty:** 1.00 **Cust Item ID:**

Required Date: 5/5/2011 **Req'd Qty:** 1.00 **Customer:**

Reference:

Run Start

Approvals: **Process Plan:** _____ **Date:** _____ **Tooling:** _____ **Date:** _____

Stop

QC: _____ **Date:** _____ **SPC (Y/N):** _____ **Date:** _____

Sequence ID/ Work Center ID	Operation Description	Set Up/ Run Hours	Tool ID	Tool #	Plan Code	Accept Qty	Reject Qty	Reject Number	Insp. Stamp
240		0.00							
Packaging	Packaging								
Packaging	**Memo**	0.00							
Packaging	Identify and pack for shipping as per PPPD350-748-201 Location: PPP Rev: B								
250	QC21- Final Inspection - Work Order Release	0.00							
QC	**Memo**	0.00							
Quality Control									

11-10-25

11/10/26

UMF
11-10-25

Dart Aerospace Ltd

W/O:		WORK ORDER CHANGES					
DATE	STEP	PROCEDURE CHANGE	By	Date	Qty	Approval Chief Eng / Prod Mgr	Approval QC Inspector

Part No: _____ **PAR #:** _____ **Fault Category:** _____ **NCR:** Yes No **DQA:** _____ **Date:** _____

Resolution: _____ **Disposition:** _____ **QA: N/C Closed:** _____ **Date:** _____

NCR:		WORK ORDER NON-CONFORMANCE (NCR)						
DATE	STEP	Description of NC Section A	Corrective Action Section B			Verification Section C	Approval Chief Eng	Approval QC Inspector
			Initial Chief Eng	Action Description Chief Eng	Sign & Date			

NOTE: Date & initial all entries

H:\fFORMS\Quality Assurance\approved QA\NCRWO RevE

Picklist Print

Friday, April 15, 2011 11:28:09 AM

Work Order ID: 68550

Parent Item: D350-748-201

Parent Item Name: Crosstube Installation, High Aft

Start Date: 4/18/2011 **Required Date:** 5/5/2011

Start Qty: 1.00 **Required Qty:** 1.00

Comments:
IPP Rev: A New Issue 06-07-05 JLM
IPP Rev: B Update qty of MS21042L5 06-09-12 KJ
IPP Rev C Combined manufacturing 08.04.02 EC verified by: DD
IPP Rev:D 08-06-24 revD as per dwg DD verified by:EC
IPP Rev: E 08.12.11 Step17 was step 21 KJ Verified by:EC IPP Rev:F
10.08.04 added QSI010 4.3 DD verf:EC

Component Item ID/ Item Name	Replacement Item ID	Mfg/ Purch	Bin Item	Primary Location	Last Location	Route Seq ID	Unit of Measure	Qty on Hand	Qty per Kit	Total Qty	Qty Issued	Date Issued	Status
ALS4-1032-225 Insert		Purchased	No			200	Each	1,113.000	1	1		11·10·21	

BF# 118696

Location		Loc Qty	Loc Code
FP-B		40	
	110768	40	
ST282		1073	
	110768	1073	

Component Item ID/ Item Name	Replacement Item ID	Mfg/ Purch	Bin Item	Primary Location	Last Location	Route Seq ID	Unit of Measure	Qty on Hand	Qty per Kit	Total Qty	Qty Issued	Date Issued	Status
AN4-41A Bolt		Purchased	No			220	Each	198.0000	8	8		11/10/24	

Location		Loc Qty	Loc Code
ST360		198	
	115108	98	
	115705	50	
	116191	50	

Dart Aerospace Ltd

W/O:		WORK ORDER CHANGES					
DATE	STEP	PROCEDURE CHANGE	By	Date	Qty	Approval Chief Eng / Prod Mgr	Approval QC Inspector

Part No: _____ **PAR #:** _____ **Fault Category:** _____ **NCR:** Yes No **DQA:** _____ **Date:** _____

Resolution: _____ **Disposition:** _____ **QA: N/C Closed:** _____ **Date:** _____

NCR:		WORK ORDER NON-CONFORMANCE (NCR)						
DATE	STEP	Description of NC Section A	Corrective Action Section B			Verification Section C	Approval Chief Eng	Approval QC Inspector
			Initial Chief Eng	Action Description Chief Eng	Sign & Date			

NOTE: Date & initial all entries

H:\fFORMS\Quality Assurance\approved QA\NCRWO RevE

Picklist Print

Friday, April 15, 2011 11:28:09 AM

Work Order ID: 68550

Parent Item: D350-748-201

Parent Item Name: Crosstube Installation, High Aft

Start Date: 4/18/2011 **Required Date:** 5/5/2011

Start Qty: 1.00 **Required Qty:** 1.00

AN4-6A Bolt		Purchased	No	220	Each	1,071.000	16	16	M118628

Location	Loc Qty	Loc Code
ST356	1071	
115936	200	
116191	71	
116400	400	
116924	400	

AN5-32A Bolt		Purchased	No	220	Each	137.0000	4	4	M117872

Location	Loc Qty	Loc Code
ST340	137	
115108	27	
115589	60	
117161	50	

AN960JD10 Washer	NAS1149D0363J	Purchased	No	200	Each	0.0000	1	1	11.10.21
AN960JD416 Washer	NAS1149D0463J	Purchased	No	220	Each	0.0000	32	32	M118612
AN960JD516 Washer	NAS1149D0563J	Purchased	No	220	Each	0.0000	8	8	~~M118612~~ 11/10/24 M118206

B# 118612

Dart Aerospace Ltd

W/O:		WORK ORDER CHANGES					
DATE	STEP	PROCEDURE CHANGE	By	Date	Qty	Approval Chief Eng / Prod Mgr	Approval QC Inspector

Part No: _____ **PAR #:** _____ **Fault Category:** _____ **NCR:** Yes No **DQA:** _____ **Date:** _____

Resolution: _____ **Disposition:** _____ **QA: N/C Closed:** _____ **Date:** _____

NCR:		WORK ORDER NON-CONFORMANCE (NCR)						
DATE	STEP	Description of NC Section A	Corrective Action Section B			Verification Section C	Approval Chief Eng	Approval QC Inspector
			Initial Chief Eng	Action Description Chief Eng	Sign & Date			

NOTE: Date & initial all entries

H:\fFORMS\Quality Assurance\approved QA\NCRWO RevE

Picklist Print

Friday, April 15, 2011 11:28:10 AM

Work Order ID: 68550

Parent Item: D350-748-201

Parent Item Name: Crosstube Installation, High Aft

Start Date: 4/18/2011 **Required Date:** 5/5/2011

Start Qty: 1.00 **Required Qty:** 1.00

D2856-400	Manufactured	No	200	f	231.0696	1.181	1.243158	11/10/21
Abraison Strip								

B# 71164

Location		Loc Qty	Loc Code
ST403		216	
	68076	216	
ST409		15.0696	
	63735	15.0696	

1- cut as per dwg D2856

D3500-1	Manufactured	No	220	Each	44.0000	4	4	
Saddle								

Location		Loc Qty	Loc Code
ST424		9	
	66127	9	
ST424/25		20	
	62207	20	
ST425		15	
	61838	15	

D3501-1	Manufactured	No	220	Each	67.0000	16	16	B68739
Bushing								

Location		Loc Qty	Loc Code
ST063		67	
	61984	67	

Dart Aerospace Ltd

W/O:		WORK ORDER CHANGES					
DATE	STEP	PROCEDURE CHANGE	By	Date	Qty	Approval Chief Eng / Prod Mgr	Approval QC Inspector

Part No: _____ **PAR #:** _____ **Fault Category:** _____ **NCR:** Yes No **DQA:** _____ **Date:** _____

Resolution: _____ **Disposition:** _____ **QA: N/C Closed:** _____ **Date:** _____

NCR:		WORK ORDER NON-CONFORMANCE (NCR)						
DATE	STEP	Description of NC Section A	Corrective Action Section B			Verification Section C	Approval Chief Eng	Approval QC Inspector
			Initial Chief Eng	Action Description Chief Eng	Sign & Date			

NOTE: Date & initial all entries

H:\fFORMS\Quality Assurance\approved QA\NCRWO RevE

Picklist Print

Friday, April 15, 2011 11:28:10 AM

Work Order ID: 68550

Parent Item: D350-748-201

Parent Item Name: Crosstube Installation, High Aft

Start Date: 4/18/2011 **Required Date:** 5/5/2011

Start Qty: 1.00 **Required Qty:** 1.00

D3502-1	Manufactured	No	200	Each	31.0000	2	2	11/10/21
Support								

Location	Loc Qty	Loc Code
ST063	31	
61206	12	
61843	9	
64004	10	

D350-748-241TRN	Manufactured	No	110	Each	2.0000	1	1	
Crosstube Turning Detail								

Location	Loc Qty	Loc Code
LG046 B68839	2	
64476	1	
64890	1	

8 MS21042L4	Purchased	No	220	Each	2,582.000	24	24	M118451
Nut								

Location	Loc Qty	Loc Code
ST300	2582	
116188	582	
116823	2000	

5 MS21042L5	Purchased	No	220	Each	761.0000	4	4	M117441 11/10/24
Nut								

Location	Loc Qty	Loc Code
ST300	761	
115594	1	
116105	500	
116548	260	

Dart Aerospace Ltd

W/O:		WORK ORDER CHANGES					
DATE	STEP	PROCEDURE CHANGE	By	Date	Qty	Approval Chief Eng / Prod Mgr	Approval QC Inspector

Part No: _____ **PAR #:** _____ **Fault Category:** _____ **NCR:** Yes No **DQA:** _____ **Date:** _____

Resolution: _____ **Disposition:** _____ **QA: N/C Closed:** _____ **Date:** _____

NCR:		WORK ORDER NON-CONFORMANCE (NCR)						
DATE	STEP	Description of NC Section A	Corrective Action Section B			Verification Section C	Approval Chief Eng	Approval QC Inspector
			Initial Chief Eng	Action Description Chief Eng	Sign & Date			

NOTE: Date & initial all entries

H:\fFORMS\Quality Assurance\approved QA\NCRWO RevE

Picklist Print

Friday, April 15, 2011 11:28:10 AM

Work Order ID: 68550

Parent Item: D350-748-201

Parent Item Name: Crosstube Installation, High Aft

Start Date: 4/18/2011 **Required Date:** 5/5/2011

Start Qty: 1.00 **Required Qty:** 1.00

MS21920-20	Purchased	No	200	Each	72.0000	2	2	11/10/21
Clamp (per MIL-DTL-8783C)								

B# 118649

Location		Loc Qty	Loc Code
LG050		72	
	116799	22	
	117279	50	

MS27039-1-10	Purchased	No	200	Each	67.0000	1	1	11/10/21
Screw								

B# 118612

Location		Loc Qty	Loc Code
ST291		67	
	115935	67	

Dart Aerospace Ltd

W/O:		WORK ORDER CHANGES					
DATE	STEP	PROCEDURE CHANGE	By	Date	Qty	Approval Chief Eng / Prod Mgr	Approval QC Inspector

Part No: _____ **PAR #:** _____ **Fault Category:** _____ **NCR:** Yes No **DQA:** _____ **Date:** _____

Resolution: _____ **Disposition:** _____ **QA: N/C Closed:** _____ **Date:** _____

NCR:		WORK ORDER NON-CONFORMANCE (NCR)						
DATE	STEP	Description of NC Section A	Corrective Action Section B			Verification Section C	Approval Chief Eng	Approval QC Inspector
			Initial Chief Eng	Action Description Chief Eng	Sign & Date			

NOTE: Date & initial all entries

H:\fFORMS\Quality Assurance\approved QA\NCRWO RevE

DART AEROSPACE LTD	Work Order:	08530
Description: Crosstube High Aft (AS350/355)	Part Number:	D350-748-201
Inspection Dwg: D350-748-241 **Rev:** E		Page 1 of 1

Required Dimension	Min	Max
Height	31.22	31.48
1/2 Span	40.77	41.03
Angle	75	77
Total Span	81.54	82.06

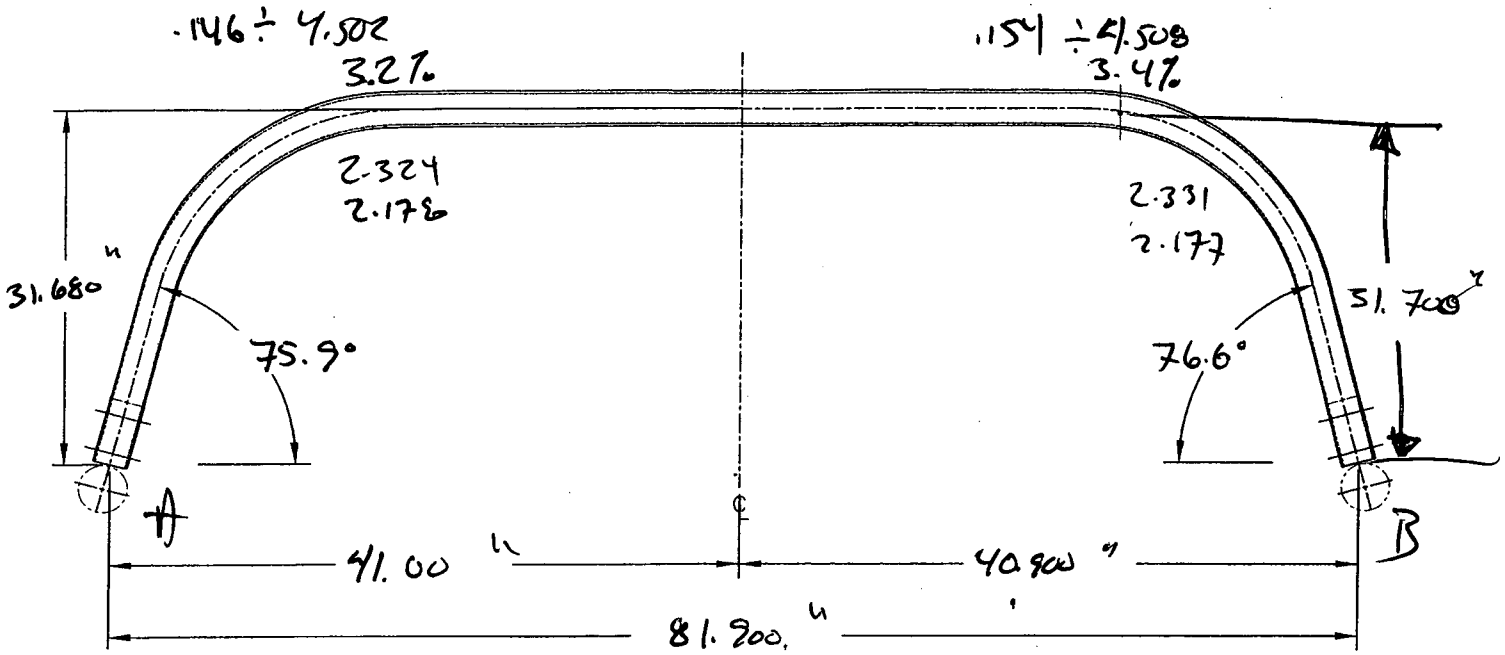

Comments
Tw.H = 0.101"
Side A = 3.2% crushing @ 15 passes
Side B = 3.4% crushing @ 7 passes
Tube bent high, but even. Acceptable. CP 11.08.30 QS/UTL

QC15 Inspection	S
Date	11/08/30

Rev	Date	Change	Revised by	Approved
A	07.02.06	New Issue	KJ/JM	
B	10.08.23	Dwg Rev updated	KJ	

DART AEROSPACE LTD	Work Order:	
Description: Crosstube High Aft (AS350/355)	**Part Number:**	**D350-748-201**
Inspection Dwg: D350-748-241 **Rev:** E		**Page 1 of 1**

Required Dimension	Min	Max
Height	31.22	31.48
1/2 Span	40.77	41.03
Angle	75	77
Total Span	81.54	82.06

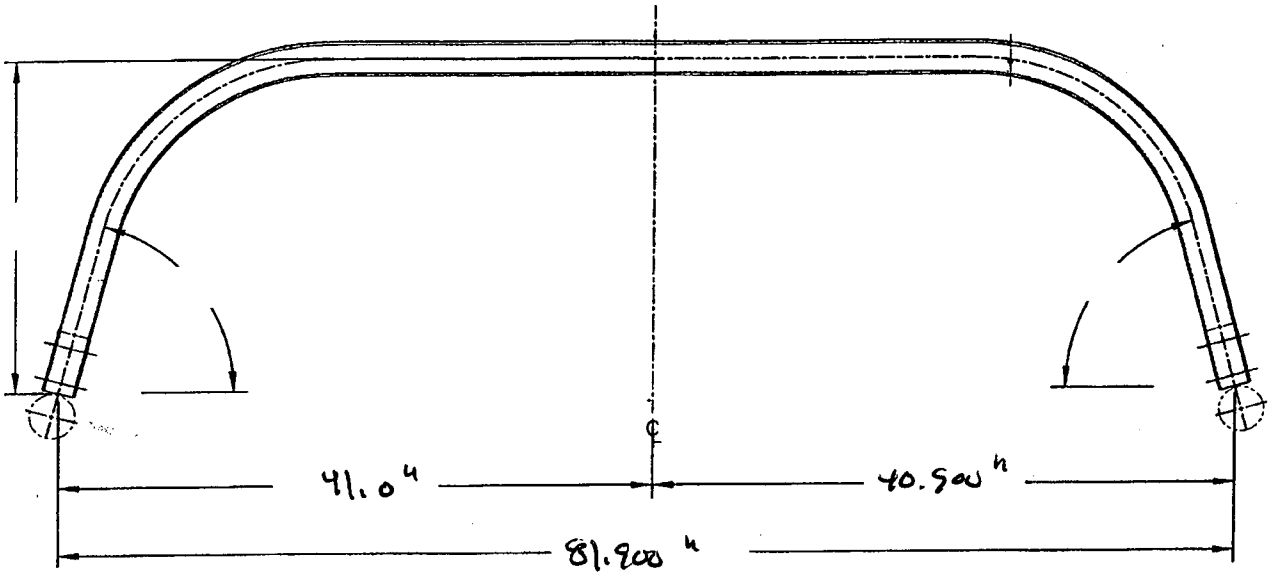

Comments
twist = 0.104"

QC15 Inspection	
Date	10/00/31

Rev	Date	Change	Revised by	Approved
A	07.02.06	New Issue	KJ/JM	
B	10.08.23	Dwg Rev updated	KJ	

Item	Qty -241	Part Number	Description
1	X	D350-748-241	CROSSTUBE ASSEMBLY (AS 350/355 HI AFT)
2	1	D6015-125	CROSSTUBE (OR D6018-125)
3	2	D3502-1	SUPPORT
4	2	D2856-400-710	ABRASION STRIP
5	1	AELS-1032-225	INSERT
6	1	NAS1149D0363J	WASHER (OR AN960JD10)
7	2	MS21920-20	CLAMP (PER DART SPEC. M-MS21920-20)
8	1	MS27039-1-10	SCREW

GENERAL NOTES:

1) MATERIAL: MANUFACTURED FROM D6015-125 OR D6018-125
   FINISHED LENGTH = 122.700±0.06
2) FINISH: MAGNETIC PARTICLE INSPECT PER DART QSI 038 4.2
   CADMIUM PLATE PER AMS-QQ-P-416B, CLASS 1, TYPE II
   PRIME INSIDE AND OUTSIDE PER DART QSI 005 4.2
   PAINT OUTSIDE PER DART QSI 005 4.2
3) TOLERANCES ARE PER DART QSI 018 UNLESS OTHERWISE NOTED.
4) UNITS: INCHES UNLESS OTHERWISE NOTED.
5) BREAK SHARP EDGES: 0.005 TO 0.010 MAX.
6) IDENTIFICATION: DART PART NUMBER "D350-748-241" AND BATCH NUMBER ON INSIDE OF CUFF PER DART QSI 044 6.4 (VIBRATING STYLUS)
7) WEIGHT: 29.85 lbs
8) PART IS SYMMETRIC ABOUT CENTERLINE, EXCEPT FOR Ø0.297 HOLE.
9) RUN CUTTER OFF PART WHERE INDICATED. BLEND OUT ALL EDGES FROM MACHINING LONGITUDINALY, TRANSITION SHOULD BE SMOOTH. NOTE: ALL HOLES ARE DRILLED AFTER BENDING.
10) BEND PROGRESSIVELY WITH A MINIMUM OF 7 PASSES. MAXIMUM TUBE FLATTENING DUE TO BENDING IS 6% BASED ON O.D.
11) HEAT TREAT TO MIN. 180 KSI PER MIL-T-6736 OR AMS 2759-1C AFTER TURNING. ACCEPTABLE TO VERIFY TENSILE STRENGTH BY HARDNESS TEST PER ASTM E18 TO 40-45 HRC.
12) INSTALL D2856-400-710 ABRASION STRIPS WITH A GAP ON BOTTOM SIDE OF CROSSTUBE, CENTERED OPPOSITE D3502-1 SUPPORT, PER QSI 035.
13) EXTREME CARE MUST BE TAKEN TO PROTECT THE OUTSIDE SURFACE OF THE TUBE. THE OUTSIDE SURFACE MUST BE SMOOTH AND FREE FROM SURFACE DEFECTS SUCH AS SCRATCHES, NICKS, OR DENTS. DEFECTS UP TO 0.005" MAY BE BLENDED OUT LONGITUDINALLY. CIRCUMFERENTIAL GRIND MARKS ARE UNACCEPTABLE. WHEN DRILLING HOLES EXTREME CARE MUST BE TAKEN AND CAREFUL DEBURRING PERFORMED TO ENSURE A CLEAN HOLE WITH NO CRACKING/CHIPPING/GROOVES.
14) TORQUE CLAMPS 60 TO 80 IN-LB. ENSURE AT LEAST 1.5 THREADS SHOWING IN SAFETY AND THAT NUT HAS NOT BOTTOMED-OUT AFTER TORQUING.
15) MAX TWIST AFTER BENDING: WITH XTUBE LAYED FLAT ON SURFACE, THE DIFFERENCE BETWEEN CUFF HEIGHTS FROM THE SURFACE MAY BE NO LARGER THAN 0.25 (ZN C1-3).

#6850

RELEASED
2011-01-08

REV.	DESCRIPTION	BY	DATE
F	ADD HRC TEST OPTION (B8-1) PER PAR 09-040, ADD TWIST LIMIT (A8-1, C1-3), ADD D6015-125 OPTION (C8-1), STOCK DIM NOW MACHINED (D1-4)	CP	10.11.23
E	REVISE GENERAL NOTES; UPDATE TO CURRENT STANDARDS; RELOCATED FLAG #6 PER PAR 08-046 (ZN A8-3); ADD TOLERANCES (ZN C6-3, D2-3)	RF	09.09.30
D	MAG. PARTICLE AND CAD PLATE AS MFD.	CP	06.10.31
C	ADD CAD PLATING	CP	06.08.14
B	ADD D6018-125 & PRIME AND PAINT	CP	06.06.30
A	NEW ISSUE	CP	06.03.31

DESIGN		DART AEROSPACE LTD HAWKESBURY, ONTARIO, CANADA	
DRAWN			
CHECKED		DRAWING NO.	REV. F
MFG. APPR.		D350-748-241	SHEET 1 OF 4
APPROVED		TITLE	SCALE
DE APPR.		CROSSTUBE (AS 350/355 HI AFT)	NTS
DATE	10.11.23		

Dart Aerospace Ltd

W/O:		WORK ORDER CHANGES					
DATE	STEP	PROCEDURE CHANGE	By	Date	Qty	Approval Chief Eng / Prod Mgr	Approval QC Inspector

Part No: _____ **PAR #:** _____ **Fault Category:** _____ **NCR:** Yes No **DQA:** _____ **Date:** _____

Resolution: _____ **Disposition:** _____ **QA: N/C Closed:** _____ **Date:** _____

NCR:		WORK ORDER NON-CONFORMANCE (NCR)						
DATE	STEP	Description of NC Section A	Corrective Action Section B			Verification Section C	Approval Chief Eng	Approval QC Inspector
			Initial Chief Eng	Action Description Chief Eng	Sign & Date			

NOTE: Date & initial all entries

H:\fFORMS\Quality Assurance\approved QA\NCRWO RevE

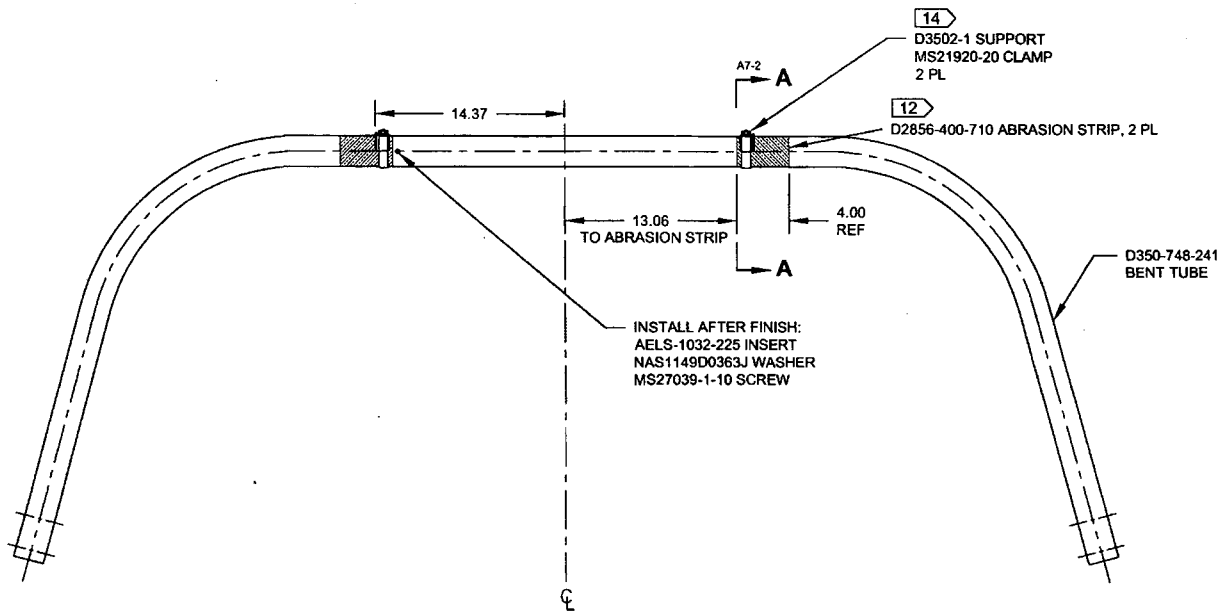

#68550

D350-748-241
ASSEMBLY DETAIL

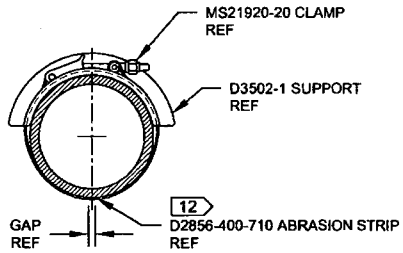

SECTION A-A D4-2
SCALE 4X

RELEASED
2011-02-18

DESIGN		**DART AEROSPACE LTD** HAWKESBURY, ONTARIO, CANADA
DRAWN		
CHECKED		DRAWING NO. REV. F
MFG. APPR.		D350-748-241 SHEET 2 OF 4
APPROVED		TITLE SCALE
DE APPR.		CROSSTUBE (AS 350/355 HI AFT) NTS
DATE 10.11.23		

Dart Aerospace Ltd

W/O:		WORK ORDER CHANGES					
DATE	STEP	PROCEDURE CHANGE	By	Date	Qty	Approval Chief Eng / Prod Mgr	Approval QC Inspector

Part No: _____ **PAR #:** _____ **Fault Category:** _____ **NCR:** Yes No **DQA:** _____ **Date:** _____

Resolution: _____ **Disposition:** _____ **QA: N/C Closed:** _____ **Date:** _____

NCR:		WORK ORDER NON-CONFORMANCE (NCR)						
DATE	STEP	Description of NC Section A	Corrective Action Section B			Verification Section C	Approval Chief Eng	Approval QC Inspector
			Initial Chief Eng	Action Description Chief Eng	Sign & Date			

NOTE: Date & initial all entries

H:\fFORMS\Quality Assurance\approved QA\NCRWO RevE

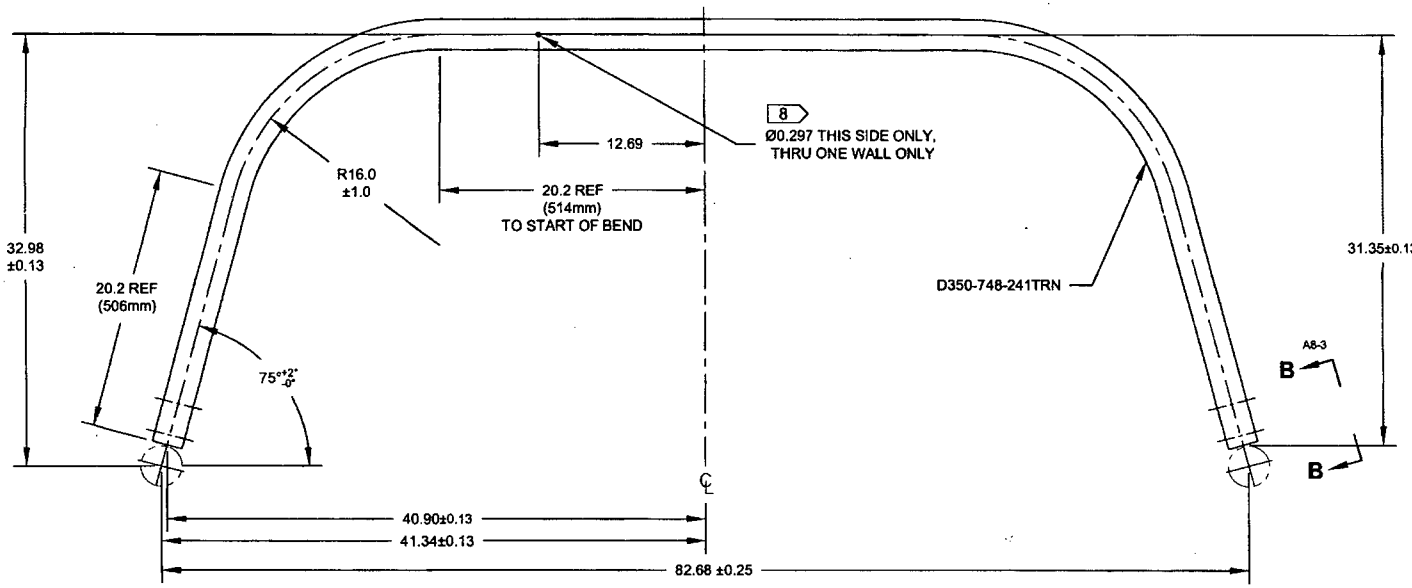

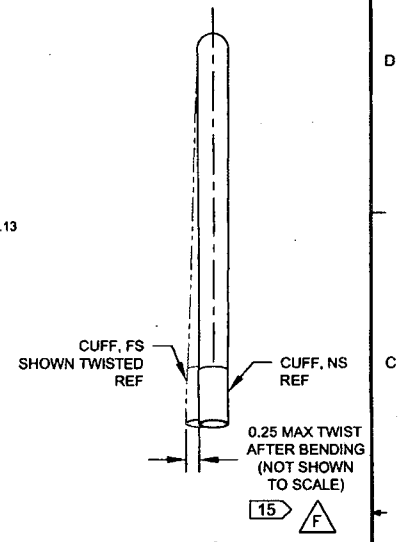

D350-748-241
BENDING AND DRILLING DETAIL 10

#68550

RELEASED
2011 -01- 18

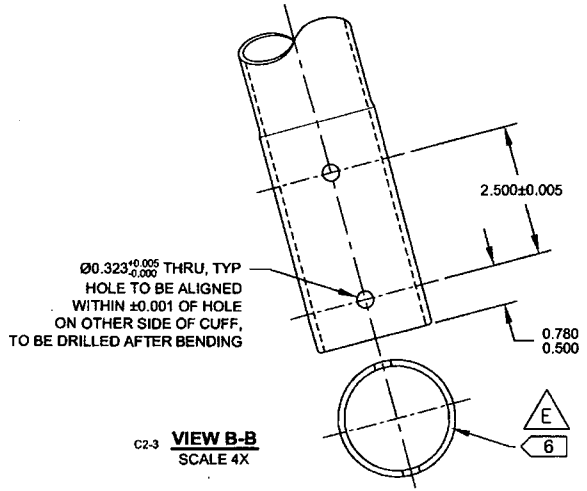

C2-3 **VIEW B-B**
SCALE 4X

DESIGN		**DART AEROSPACE LTD** HAWKESBURY, ONTARIO, CANADA	
DRAWN			
CHECKED		DRAWING NO.	REV. F
MFG. APPR.		D350-748-241	SHEET 3 OF 4
APPROVED		TITLE	SCALE
DE APPR.		CROSSTUBE (AS 350/355 HI AFT)	NTS
DATE	10.11.23		

Dart Aerospace Ltd

W/O:		WORK ORDER CHANGES					
DATE	STEP	PROCEDURE CHANGE	By	Date	Qty	Approval Chief Eng / Prod Mgr	Approval QC Inspector

Part No: _____ **PAR #:** _____ **Fault Category:** _____ **NCR:** Yes No **DQA:** _____ **Date:** _____

Resolution: _____ **Disposition:** _____ **QA: N/C Closed:** _____ **Date:** _____

NCR:		WORK ORDER NON-CONFORMANCE (NCR)						
DATE	STEP	Description of NC Section A	Corrective Action Section B			Verification Section C	Approval Chief Eng	Approval QC Inspector
			Initial Chief Eng	Action Description Chief Eng	Sign & Date			

NOTE: Date & initial all entries

H:\fFORMS\Quality Assurance\approved QA\NCRWO RevE

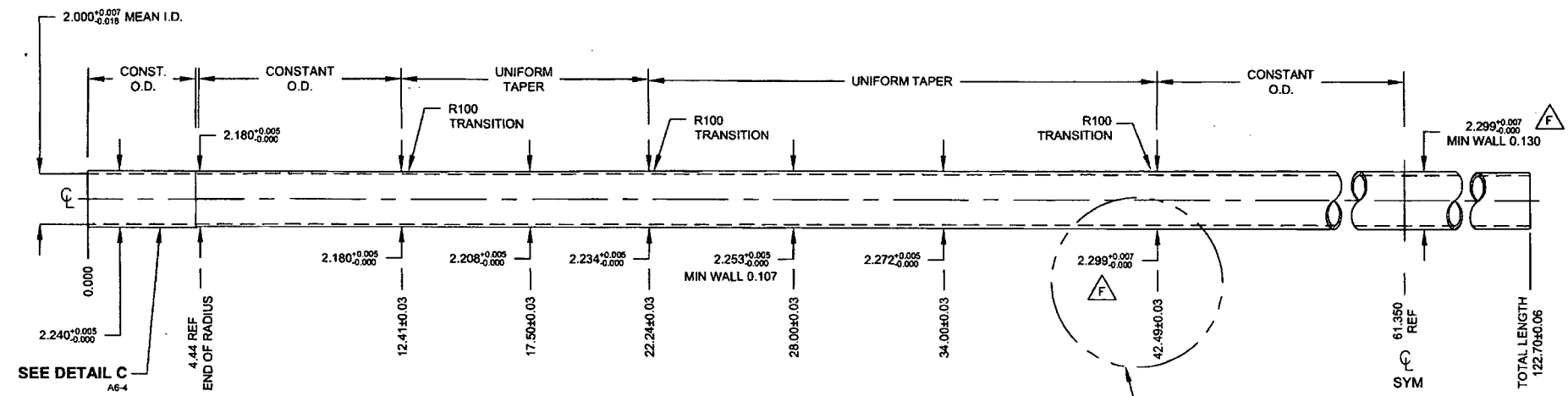

#68550

D350-748-241TRN
TURNING DETAIL

RELEASED
2011 -01- 18

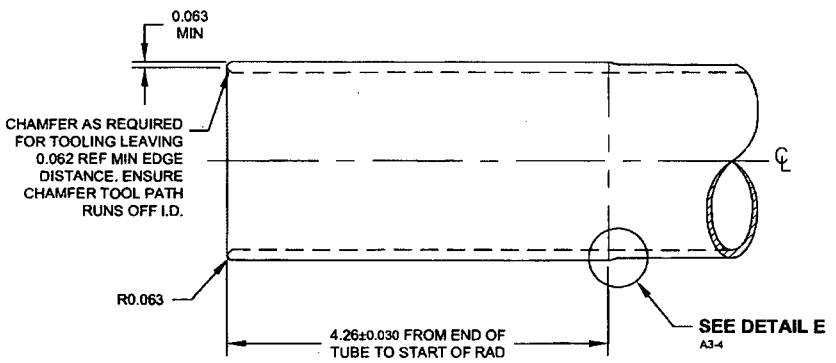

DETAIL C:
CROSSTUBE CUFF C6-4
SCALE 3X

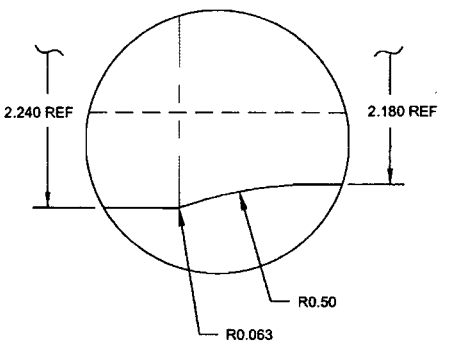

DETAIL E:
CUFF TRANSITION A5-4
NOT TO SCALE

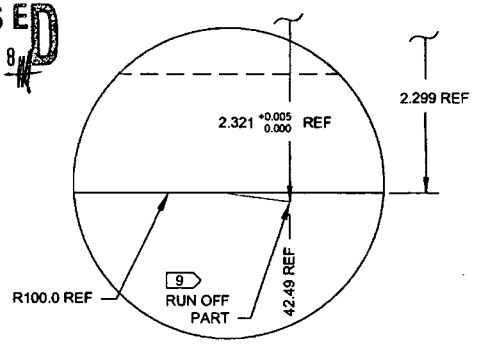

DETAIL D:
TAPER RUN-OFF C3-4
NOT TO SCALE

DESIGN		**DART AEROSPACE LTD** HAWKESBURY, ONTARIO, CANADA
DRAWN		
CHECKED		DRAWING NO. D350-748-241 — REV. F — SHEET 4 OF 4
MFG. APPR.		
APPROVED		TITLE: CROSSTUBE (AS 350/355 HI AFT) — SCALE: NTS
DE APPR.		
DATE	10.11.23	

Dart Aerospace Ltd

W/O:		WORK ORDER CHANGES					
DATE	STEP	PROCEDURE CHANGE	By	Date	Qty	Approval Chief Eng / Prod Mgr	Approval QC Inspector

Part No: _____ PAR #: _____ Fault Category: _____ NCR: Yes No DQA: _____ Date: _____

Resolution: _____ Disposition: _____ QA: N/C Closed: _____ Date: _____

NCR:		WORK ORDER NON-CONFORMANCE (NCR)						
DATE	STEP	Description of NC Section A	Corrective Action Section B			Verification Section C	Approval Chief Eng	Approval QC Inspector
			Initial Chief Eng	Action Description Chief Eng	Sign & Date			

NOTE: Date & initial all entries

H:\fFORMS\Quality Assurance\approved QA\NCRWO RevE

CERTIFICATE OF CONFORMANCE

CADORATH PLATING CO. LTD.
2150 LOGAN AVENUE
WINNIPEG, MANITOBA R2J-0J1

DATE: Sep-30-2011

CONSIGNED TO: Dart Aerospace Ltd.
1270 Aberdeen St.
Hawksbury, ON K6A 1K7

W/O #: 107799
INVOICE #: 56968

CONTRACT OR PURCHASE ORDER # 14834

DESCRIPTION: SKID **QTY** 1

P/N # D350-748-201 **S/N #** B68550

STRESS RELIEF BAKE HEAT CHART # 11-1001. MPI IAW ASTM -E-1444. CADMIUM PLATE IAW AMS-QQ-P-416 C TYPE 2 YELLOW CLASS 1. BAKE HEAT CHART # 11-1027.

CERTIFICATE: I certify that the items indicated here on have been inspected and tested and conform to all specifications and requirements detailed on the contract or purchase order.

Approved Inspector: CP 2

ACUREN

LIQUID PENETRANT TEST REPORT

P- 05635

PAGE 1 OF 1

CLIENT: DART AEROSPACE
DATE: OCT-14-2011
TIME: AM ☑ PM ☐
ATTENTION: LINDA/CHANTALE/IAN/MATT
ACUREN JOB NO.
ADDRESS: 170 ABERDEEN ST. HAWKESBURY ON
PO/WO NO. 148341
WORK LOCATION
ACCEPTANCE STD.
REV./DATE
PROJECT: PT-D WET FLUORESCENT LIQUID PENETRANT ON "CROSSTUBES"
ITEM(S) EXAMINED: SEE BELOW

JOB DESCRIPTION | PROCEDURE NO. LT-002 REV./DATE 2007 | TECHNIQUE NO. LT-002 REV./DATE 2007

PART NO.
MATERIAL: STEEL
THICKNESS: N/A
SCOPE: PERFORMED A WET FLUORESCENT LIQUID PENETRANT INSPECTION ON 100% OF THE EXTERNAL SURFACE ON THE ITEMS MENTIONED BELOW

TEST DETAILS

METHOD	☑ FLUORESCENT ☐ VISIBLE	☑ WATER WASH ☐ SOLVENT REMOVABLE ☐ POST EMULSIFIED	
FAMILY BRAND	MAGNAFLUX	BLACK LIGHT S/N 13798	☑ OUTPUT > 1000 µW/CM² ☐ AMBIENT < 2 fc
PENETRANT	ZL-67 MINIMUM DWELL TIME 10 MIN.	LIGHTING EQUIP. ☐ FLASHLIGHT ☐ TROUBLELIGHT	☐ OUTPUT>100 fc @ SURFACE
PENETRANT REMOVER	H2O MINIMUM DRY TIME >10 MIN.	OTHER	
DEVELOPER	SKD-S2 MINIMUM DWELL TIME 10 MIN.	LIGHT METER S/N	CAL DUE DATE AUG/2011
DEVELOPER TYPE	☑ NON AQUEOUS ☐ AQUEOUS ☐ DRY		

TEST SURFACE

SURFACE CONDITION: ☐ AS GROUND ☐ AS WELDED ☐ MACHINED ☐ SHOT BLASTED ☑ CLEAN BARE METAL
SURFACE TEMPERATURE: ☐ < - 4°C/ 20°F ☐ - 4°C/ 20°F TO 10°C/50°F ☑ 10°C/50°F TO 52°C/125°F ☐ > 52°C/125°F

RESULTS- (☐ METRIC ☐ IMPERIAL)

	CROSSTUBE W.O. ID	ITEM ID
1	68549 ✓	D350-748-201 HIGH AFT
2	68550 ✓	D350-748-201 HIGH AFT
3	68551 ✓	D350-748-201 HIGH AFT
4	68553 ✓	D350-748-201 HIGH AFT
5	72004 ✓	D350-748-201 HIGH AFT
6	72005 ✓	D350-748-201 HIGH AFT
7	73364 ✓	D350-748-201 HIGH AFT

NO RELEVANT INDICATION WAS DETECTED AS PER APPLICABLE STANDARDS.

11.10.17

SIGNATURES

CLIENT REPRESENTATIVE: Ian Titley (PRINT) [signature] (SIGNATURE)
TECHNICIAN (SIGNATURE):
NAME (PRINT): YVES DESROSIERS

1ST TECHNICIAN	2ND TECHNICIAN
CGSB LEVEL 2 SNT LEVEL 2	CGSB LEVEL — SNT LEVEL —
CGSB REG. NO 3049	CGSB REG. NO —

DTR # E44763

REPORT REVIEWED BY:

NAME	INITIALS

WHITE – CLIENT COPY CANARY – OFFICE COPY PINK – TECHNICIAN COPY GOLD – OFFICE COPY